REV	DATE	ECO	COMMENTS
A	06/04/03	169	ADD METRIC UNITS

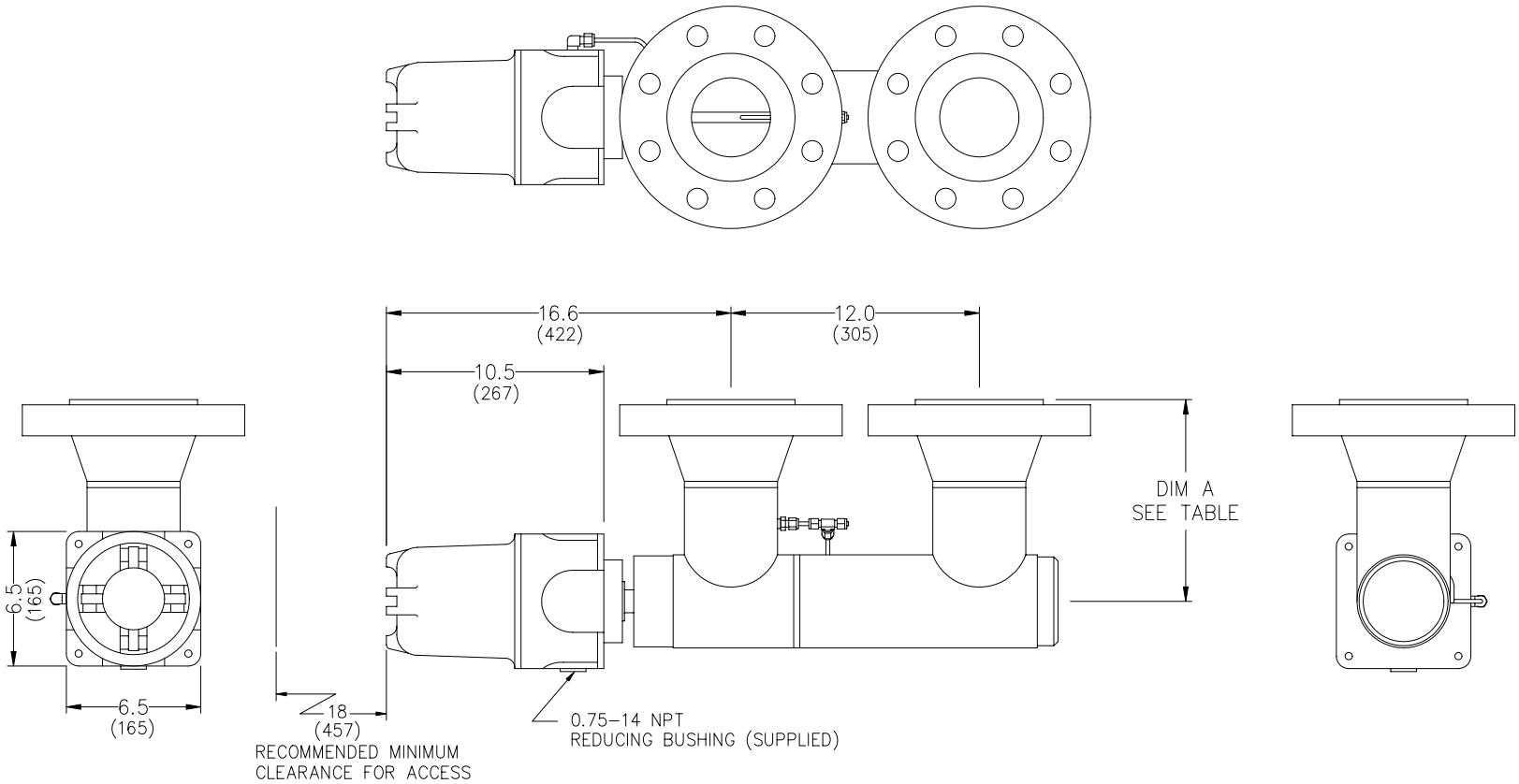

NOTES:

1. ALL DIMENSIONS GIVEN IN INCHES
   MILLIMETER DIMENSIONS SHOWN IN ( )

FLANGE SIZE	DIMENSION "A"	WEIGHT (LBS)	(KG)
ANSI 150	8.50 (216)	89	40
ANSI 300	8.88 (226)	109	50
ANSI 600	9.75 (248)	130	59
ANSI 900	10.25 (260)	158	72

PHASE DYNAMICS, INC
RICHARDSON, TEXAS

TITLE
INSTALLATION, 4 INCH U CONFIG
RAISED FACE FLANGES

SIZE	DWG NO.	DATE
C	0070–00157–000	06/20/99

REV A

© PHASE DYNAMICS, INC.