DWG NO.	REV	SH
0070-00213-000		1/1

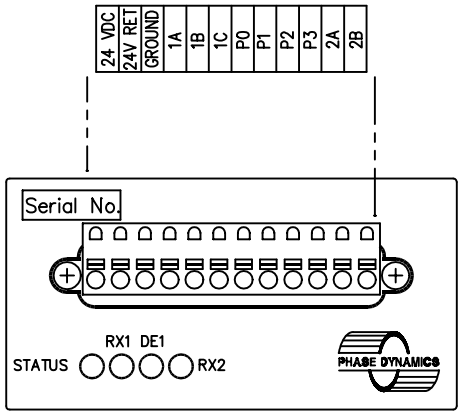

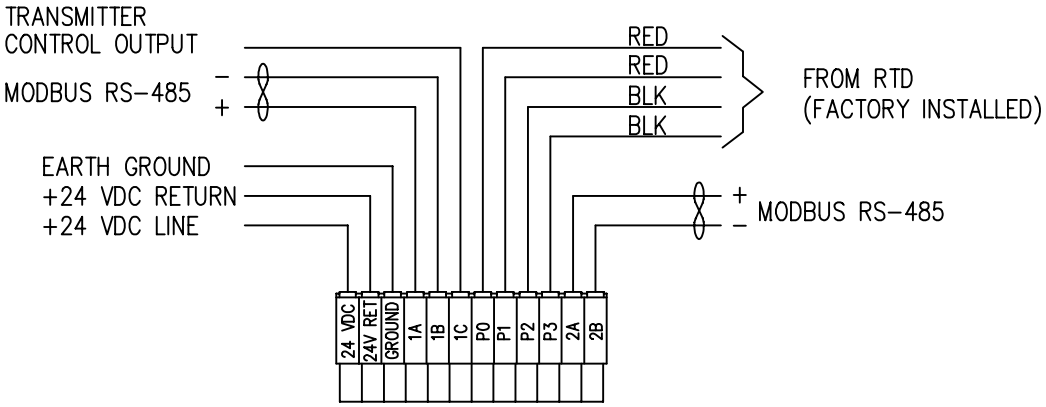

NOTES:
1. MAX WIRE SIZE: 12 AWG
2. TWISTED SHIELDED PAIR INDICATED BY

PHASE DYNAMICS, INC
RICHARDSON, TEXAS

TITLE
24VDC STANDALONE WIRING DIAGRAM (MODBUS NETWORK)

SIZE	DWG NO.	DATE
B	0070-00213-000	01/06/06

REV

© PHASE DYNAMICS, INC.